SINCE 1842

CASE CONSTRUCTION

E-SERIES

CRAWLER EXCAVATORS

CX250E | CX300E

HERITAGE
A TRADITION OF INDUSTRY FIRSTS

1842
CASE is founded.

1869
The first CASE portable steam engine - road construction is born.

1957
The first factory-integrated loader/backhoe in the world: a CASE industry first.

1969
CASE begins skid steer loader production.

1977
CASE acquires Poclain, a French brand leader in the excavators market.

1992
Sumitomo becomes supplier to CASE Corporation distributing excavators ranging from 7 to 80 tons.

1998
Global Alliance signed between CASE Corporation and Sumitomo.

2001
CASE introduces the first of its CX excavators, powerful new “thinking machines” designed to enhance productivity through onboard intelligence features.

2007
CX210B is awarded the «Good Desing Award» by the design Academy of Japan.

2008
CX210B wins the 18th «Energy Conservation Award» from the Agency for Natural Resources and Energy of the Japanese Ministry of Economy.

2011
CASE becomes the first construction equipment manufacturer to offer both selective catalytic reduction and cooled exhaust gas recirculation as solutions to meet stringent emissions standards.

2015
CASE launches the new “D-Series” Tier 4 final / EU Stage IV Crawler Excavators.

2018
Stage V production for models CX350D and above, followed by Short Radius models.

2021
CASE introduces the first models of Stage V E-Series Crawler Excavators, featuring new FPT engine, new monitor, enhanced hydraulics and improved connected services.

CRAWLER EXCAVATORS
E-NHANCED GENERATION

ENHANCED QUALITY AND RELIABILITY
Stronger than ever, built to last

+ The reinforced clamp improves the pipe holding force on the boom.
+ The shape and thickness of the inner reinforcement plate increase the boom's durability.
+ The tolerance of the boom and arm cylinder pins has been updated to reduce clatter and play within the bushing.
+ A new stop valve adjustment mechanism has been added for easier piping-valve connection.
+ The more compact assembly of the undercarriage recoil spring and grease cylinder facilitates clearing the mud.
+ The CX210E and CX250E feature a new, more efficient and durable travel motor, while the upgraded travel motor on the CX300E delivers higher drawbar pull.
+ The upper carrier rollers (on CX160E / CX180E / CX210E / CX250E) have been upgraded for greater durability.
+ The shoe bolt size (on CX300E) has been increased.

ENHANCED PRECISION AND CONTROLLABILITY
Smooth control, efficient operation – more than ever

The trademark CASE Intelligent Hydraulic System (CIHS) is now paired with new work modes and adjustable hydraulic settings to deliver smoother and more efficient operation than the previous generation.

E-SERIES
CRAWLER EXCAVATORS

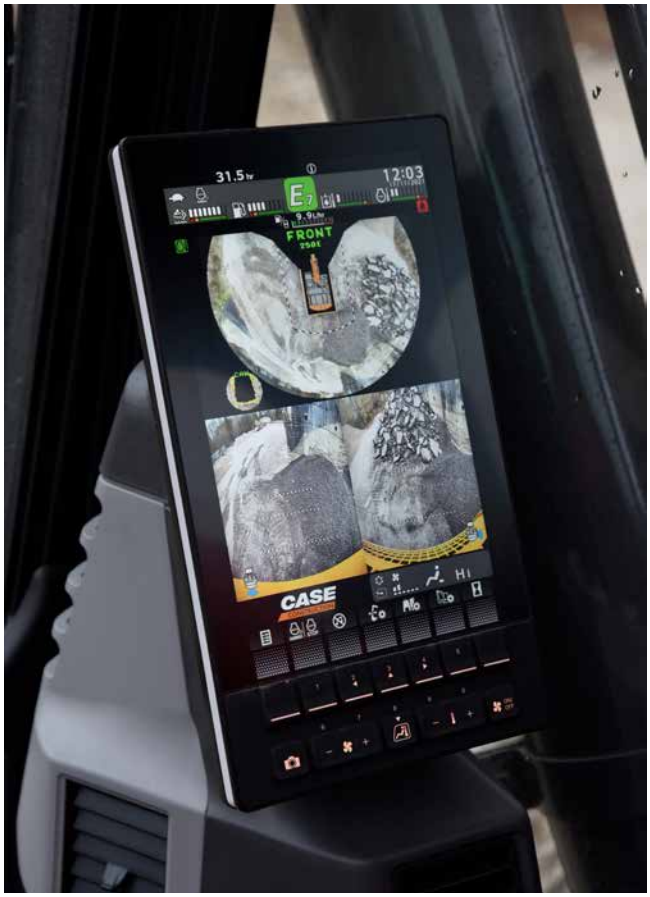

ENHANCED VERSATILITY
A high degree of customization for every task

The new-concept work modes with independent throttle position offer a precise match to the requirements of every task:

SP (Super Power) mode for maximum productivity (as in D-Series) with the throttle set at maximum power.

P (Power) mode replaces H and A mode in D-Series, with throttle settings from 1 to 10.

E (Eco) mode for maximum fuel economy, with throttle settings from 1 to 10.

L (Lifting) mode is optimized for object handling with power boost permanently activated and overload warning system, and throttle settings from 1 to 6.

The choice of available work modes can be locked by the machine owner.

NEW The ground-breaking Eco mode reduces fuel consumption through selective control of engine and pump depending on the movement. It maintains maximum pump torque to deliver high productivity, while minimizing fuel consumption during low effort operations.

The balance of the hydraulic flows can also be customized to suit the operator's preferences:

+ **"Arm In"** vs **"Boom Up"**
+ **"Arm In"** vs **"Swing"**

The E-Series takes versatility even further by enabling the operator to select the type of work tool and input the customizable model number on the machine's monitor. When selecting the flow and pressure settings, they can also set the maximum overflow to protect the attachment.

The optional **Steelwrist** provision with advanced Quantum control system, additional monitor, new configurable joysticks and electrical connection up to arm top, facilitates a quick and easy aftermarket addition of Steelwrist tiltrotators to achieve maximum flexibility in a variety of jobsites.

PRODUCTIVITY
WORK SMART, PRODUCE MORE

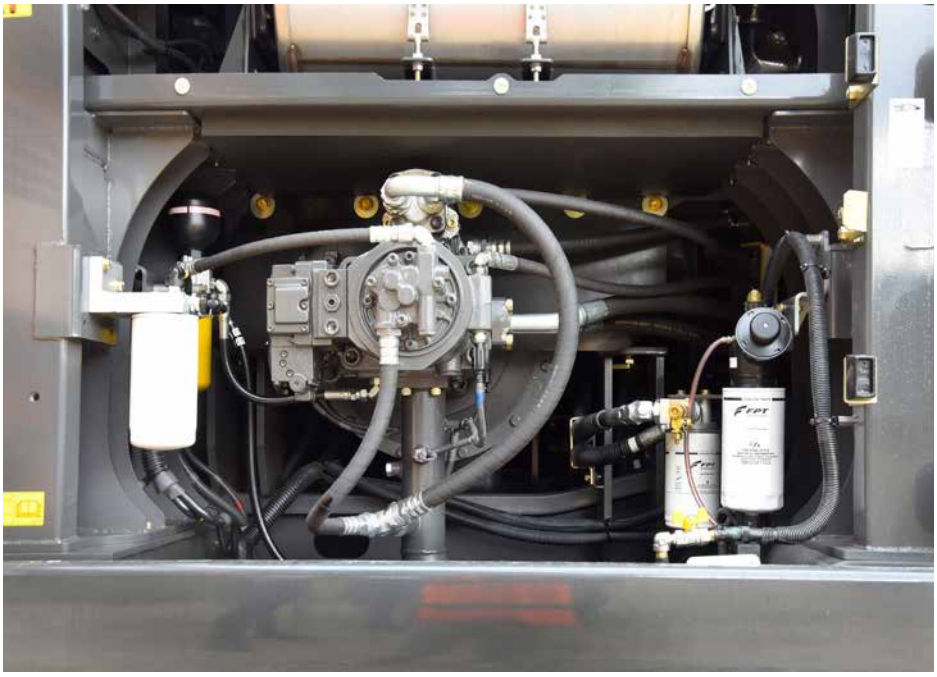

ENHANCED EFFICIENCY
Top performance, high fuel economy

The new-generation E-Series combines the proven energy saving features of the D-Series with new work modes and hydraulic settings to raise the bar on efficiency.

The advanced automatic energy management system inherited from the D-Series consists of six key energy control functionalities:

+ **Pump Torque Control:** prevents drops in engine speed due to overtorque in high load operations while reducing fuel consumption in operations where maximum pump power is not required.
+ **Boom Economy Control:** increases fuel efficiency during boom down and swing movements.
+ **Swing Relief Control:** reduces the initial pump flow while improving control at the start of swing movements to lower fuel consumption.
+ **Spool Stroke Control:** automatically adjusts pressure based on the sensors' feedback, avoiding unnecessary functionality.
+ **Boom Oil Regeneration:** the returning oil from boom down is used to speed up the arm out movement [only from CX210E upward].
+ **Auto Idle / Idle Shutdown:** customizable and manually switchable functions that lower engine rpms after a period of inactivity or shut down the engine after a period of idling.

With all these features, coordinated by the CASE Intelligent Hydraulic System, together with the new FPT engine and improved travel motor for additional mechanical efficiency, the E-Series excavators deliver unprecedented performance and high fuel economy.

CLEANER POWER
EU Stage V compliant engines

The new FPT NEF engines meet Stage V standards with the innovative HI-eSCR2 solution developed in-house, which only uses a Diesel Oxydation Catalyst and an integrated **maintenance-free** device on the SCR catalyst to achieve this dramatic reduction in emissions.

+ The SCR-on-Filter is “built-for-life” and requires no replacement or mechanical cleaning for its entire guaranteed emission regulation life.
+ The air intake flow is increased by a turbocharger with air-to-air cooling.
+ The multiple injection delivers best-in-class high torque performance at low rpms.
+ **No EGR** valve means 100% fresh air is used for combustion and no extra cooling system is required.

The new Stage V NEF engines can take their low-emission performance even further, as they can operate on **B7 biodiesel** and **HVO** (an even cleaner and more high-quality alternative to biodiesel, with superior performances in cold weathers) and other paraffinic fuels like **GTL** (Gas-to-Liquids), **CTL** (Coal-to-Liquids), **BTL** (Biomass-to-Liquids).

COMFORT RULES
FIRST CLASS CAB AND SEAT

ENHANCED COMFORT
Ideal working conditions, every day

+ Pressurized cab with improved sealing, wide access space and increased foot space.
+ Ergonomic air-suspended high-back seat with tilt adjustment and heater.
+ Console suspended with the seat and optimized control lever positions: the operator maintains their preferred working posture when adjusting the seat's position.
+ Reduced pedal travel and footrest reduce fatigue during operation.
+ Automatic air conditioning controls integrated in the monitor.
+ Air conditioning performance improved with a cooling upgrade and optimal air vents location.
+ Optimized storage capacity with lunch box tray and cool box, smartphone tray, and two large drink holders.
+ Repositioned lower track rollers reduce vibrations for smoother travelling.
+ Quieter cab with 1 dB lower internal noise compared to D-Series on CX210E, and 3 dB lower on CX250E / CX300E.

SAFETY AND MAINTENANCE
WORK SAFELY IN ALL CONDITIONS

SAFER OPERATION AND ACCESSIBILITY
Safety first, inside and outside the cab

+ Reinforced cab structure ROPS and FOPS compliant.
+ Standard FOPS level 2 head protection.
+ Factory fitted front guard OPG 1 and 2; grill guard available as DIA kit.
+ Factory fitted travel alarm for greater safety on the jobsite around the machine.
+ New auto lever lock safety feature immediately stops machine movement when the operator unintentionally unlocks the gate lock.
+ Seat belt fastened detection.
+ Wide, robust and comfortable steps, and handrail for safe access to the top of the hood.
+ Non-slip plates and top hood cover supported by two gas pistons and secured by two mechanical stops.
+ Wide platform on top of the engine compartment to work safely on the engine box.

SUPERIOR VISIBILITY
Designed for outstanding visibility

Visibility – already outstanding in the D-Series - has been further enhanced:

+ Glazed surface with improved visibility on the right hand side.
+ Bigger monitor (from 7 to 10'') with higher resolution, five configurable buttons and additional menus on the display.
+ Standard rear- and right-hand cameras, and an optional left-hand camera is available for the 270° CASE Maximum View Monitor with revised screen layout.
+ Upgraded cameras for better color balance.
+ Improved front window defrost.
+ New diffusion spray type window washer nozzle ensures better windshield cleaning.
+ LED lights package standard, plus optional Deluxe package at 3700 lumen and 4 extra front lights for even better performances (only Mono models).
+ "Follow me" lights function with selectable off timer.

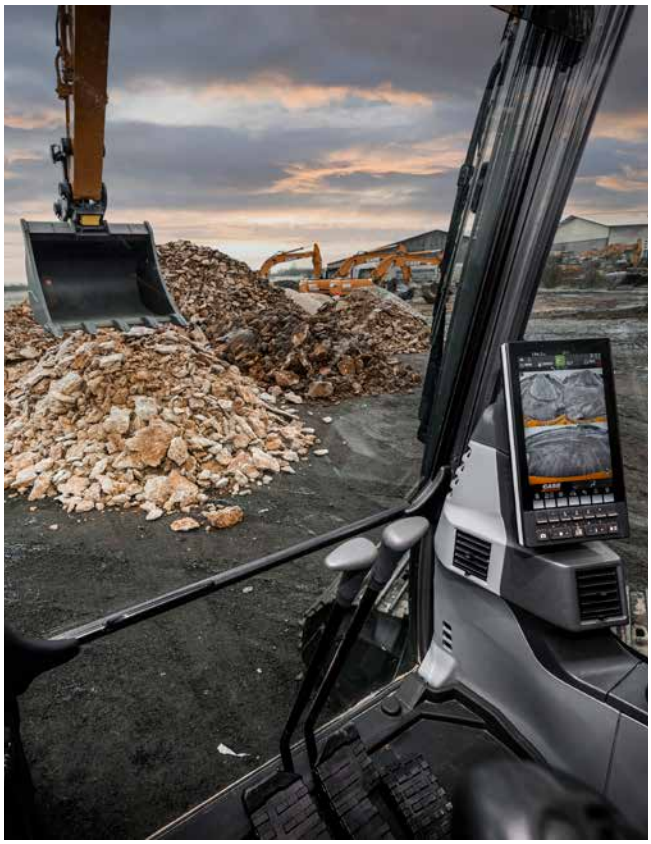

SAFETY AND MAINTENANCE
WORK SAFELY IN ALL CONDITIONS

EASY MAINTENANCE

"Grounded" and connected services solution

+ New extended service intervals for lower maintenance costs:
  - **Engine oil, fuel & oil filters** extended from 500 to 1,000 hours;
  - **AdBlue supply module filter** was 3,000 hours, it goes up to 4,000 hours;
  - **Travel gear oil** extended from 1,000 to 2,000 hours (on CX210E / CX250E).
+ Extended Maintenance System (EMS) bushings provide 1,000 hour greasing intervals on arm and boom pins and 250 hours on the attachment pin.
+ No EGR reduces complexity in the ATS.
+ SCR-on-Filter auto-cleaning device requires no replacement or mechanical cleaning during guaranteed life span.
+ Factory fitted automatic greasing system, including bucket linkage, to enhance uptime, serviceability and efficiency.
+ Fuel nozzle with integrated fuel tank float provides better visibility during refilling.
+ Hydraulic oil tank cap with integrated air breather for tool-less refill.
+ Newly added sampling valve in pump room for easier hydraulic oil sampling.
+ Increased washer tank capacity for fewer washer refills.
+ Grease cylinder compact design for easier mud cleaning around carrier rollers.
+ Two-piece split cab floor mat for simpler cleaning.
+ Radiator shroud with larger opening from the side and additional opening below the upper structure for better accessibility (added opening on CX250E).
+ Air cleaner height change for easier put on and off.

+ A/C condenser tilt movement added to facilitate cleaning.
+ New reversible fan option (available for CX210E / CX250E).
+ Fan belt auto-tensioner requires no manual calibration.
+ Remote diagnostics and assistance, and interactive maintenance with the new bidirectional CASE SiteConnect module and enhanced SiteWatch telematics services.

MAIN REASONS
TO CHOOSE THE NEW E-SERIES

BEST MATCH BETWEEN SPEED AND CONTROLLABILITY

CASE Intelligent Hydraulics System (CIHS) is synonymous and reference in the market for its fastest cycles times, best energy saving performance and smooth control.

ENHANCED QUALITY AND RELIABILITY

CASE excavators are known for their balanced design and first-class components. New improvements to arm, boom and undercarriage structure make them even better.

ENHANCED VERSATILITY

+ ***NEW*** 4 work modes (Super Power, Power, Eco, Lifting)
+ ***NEW*** 10 throttle settings, independent from work mode
+ ***NEW*** arm, boom and swing flow balance customization to suit every application
+ ***NEW*** attachment types and names storable in the display for quicker tools management
+ ***NEW*** Steelwrist-ready tiltrotator provision

ENHANCED EFFICIENCY

+ ***NEW*** Eco mode ensures the best selective engine and pump control, maximizing torque only when needed and saving more fuel
+ ***NEW*** FPT Stage V engine with no EGR, more efficient combustion
+ ***NEW*** upgraded travel motor for improved mechanical efficiency

ENHANCED CONNECTIVITY

+ ***NEW*** bidirectional CASE SiteConnect module
+ ***NEW*** interactive maintenance capabilities
+ ***NEW*** remote assistance
+ ***NEW*** standard CASE full telematics solution (modem, wiring, harnesses, antenna and 3-year advanced SiteWatch subscription)

SUPERIOR VISIBILITY

+ ***NEW*** 10” LCD monitor – the biggest in the industry – with 5 configurable buttons and new menu functions
+ ***NEW*** front window defrost and washing improvement
+ ***NEW*** greater visibility on the right hand side
+ Optional CASE Maximum View Monitor for optimized all-around visibility
+ LED lighting, with Deluxe upgrade available

ENHANCED COMFORT

+ ***NEW*** console suspended with seat
+ ***NEW*** wide access space and increased foot space
+ ***NEW*** dedicated A/C controls in the monitor, always within easy reach
+ ***NEW*** improved air conditioning with new air vents
+ ***NEW*** smoother travelling with repositioned rollers
+ ***NEW*** quieter environment in the cab

EASY MAINTENANCE

+ ***NEW*** extended 1,000-hour engine oil, fuel & oil filters change interval + 1,000-hour bushing greasing intervals for arm and boom pins
+ ***NEW*** SCR-on-Filter auto-cleaning device – maintenance-free and built-for-life
+ ***NEW*** easy access to hydraulic tank thanks to cap with air breather
+ ***NEW*** split type floor mat
+ ***NEW*** optional reversible fan for improved radiator cleaning efficiency (CX250E)
+ ***NEW*** automatic greasing system

CLEANER POWER

+ ***NEW*** STAGE V engine by FPT, the European leader, known for its reliability and innovative tradition, with more than 25 years' experience
+ ***NEW*** High Efficiency SCR 2 system, covered by 13 patents
+ ***NEW*** EGR-free
+ ***NEW*** compatible with HVO and synthetic alternative fuels

SAFER OPERATION AND ACCESSIBILITY

+ ROPS cab with FOPS level 2
+ Standard extended handrails and guardrails
+ Factory fitted travel alarm
+ ***NEW*** auto lever lock safety feature

CASE® CONSTRUCTION | SiteWatch™

THE SCIENCE BIT

The CASE SiteWatch telematics system uses a high-tech control unit mounted on each machine to collate information from that machine and from GPS satellites. This data is then sent wirelessly through the mobile communication networks to the CASE Telematics Web Portal.

SITEWATCH: CENTRALISED FLEET CONTROL BENEFITS AT YOUR FINGERTIPS

Measure your true asset availability and optimise it

+ Eliminate the “phantom fleet”: SiteWatch allows to identify spare units or under loaded machines on each site.
+ Become able to reallocate units where they are more needed.
+ Forward maintenance planning is easier since the actualised working hours are always available.
+ Extend the benefits of SiteWatch to the rest of your fleet: SiteWatch can be installed on the units of other brands as well.

Challenge your Total Cost of Ownership!

+ Being able to compare the fuel usage of different machine types will allow you choose the right equipment.
+ Save on transport costs with planned and grouped maintenance tasks.
+ Peace of mind, optimised uptime and lower repair costs: with preventive maintenance you can for example be alerted if the engine needs to be serviced and avoid disruptive breakdown.
+ Be able to compare your asset Return on Investment on different sites.
+ Your equipment is used only during working hours. You can set up alerts so that you know if it is in use during the weekend or at night.
+ Integrate with the programmed maintenance package, which ensures the required services are performed at the right time.

More safety, lower insurance premium

+ Keep thieves away: dissuade them from attacking your asset because it is geo-localised. SiteWatch is hidden so that thieves can’t find it quickly.
+ Your fleet is used only where you decide. You can define a virtual fence and receive an email when a machine exits that perimeter.

CASE EXPERT SUPPORT
ALWAYS WITH YOU

SITECONNECT: PROACTIVE SUPPORT AND REMOTE ASSISTANCE

The SiteConnect module allows to establish a 2-way communication between your machine and your CASE Dealer. They will be able to run remote diagnostics and analyze the machine data before travelling to the unit.

Maximize your machine's uptime

+ Save time as your dealer conducts remote assistance to the operator. The machine can be anywhere while the dealer remotely connects with the machine to do diagnostics.
+ The dealer is supporting you with SiteConnect tools to maximize the uptime for your machine

Optimize service efficiency

+ By enabling your dealer to investigate your asset remotely, allows them to resolve issues in the shortest possible time, in a single visit, with the correct parts and tools.
+ Electronic control units installed on the machine may be subject to software updates: With the SiteConnect module your CASE Dealer will be able to do software updates on your machine remotely
+ Increase uptime, reduce costs!

Lower your Total Cost of Ownership

+ Thanks to the data collected about your machine condition and performance by Siteconnect, your CASE dealer can provide a quick and effective service, when you need it. This gives you increased Uptime.

Download the SiteManager app to enable remote access to your equipment directly from Dealer facilities, always under your permission.
A sticker with a SiteConnect QR code is placed on the rear window.
Scan the QR code with your mobile device to quickly access the SiteConnect page, where you can easily download the SiteManager App and get more useful contents.

STANDARD AND OPTIONS

STANDARD EQUIPMENT

ENGINE
+ FPT NEF 6-cylinder turbo-charged diesel
+ Stage V
+ Selective Catalytic Reduction on Filter (SCRoF)
+ Diesel Oxidation Catalyst (DOC)
+ EGR-free
+ VGT turbocharger
+ Electronic fuel injection
+ High pressure common rail system
+ Neutral safety start
+ Auto engine warm up, emergency stop
+ Glow-plug pre-heat
+ EPF (Engine Protection Feature)
+ Dual-stage fuel filtration
+ Dual element air filter
+ Remote oil filter
+ Green plug oil drain
+ 1,000 hour engine oil and fuel filters change interval
+ 24V system
+ Battery disconnect switch
+ High ambient temperature cooling package
+ External fuel and AdBlue gauges
+ Fuel cooler
+ Fuel filter + fuel prefilter with water accumulation indicator
+ Fuel shut-off valve
+ Idle start
+ Radiator, oil cooler, intercooler – protective screen
+ Refueling pump

FUEL ECONOMY SYSTEMS
+ Eco mode
+ Auto idle
+ One-touch idle
+ Idle shutdown
+ Pump Torque Control (PTC)
+ Boom Economy Control (BEC)
+ Swing Relief Control (SRF)
+ Spool Stroke Control (SSC)
+ Boom Oil Regeneration (BOR)

HYDRAULICS
+ Hydraulic flow control balance
+ Electronically controlled hydraulic pumps
+ Auto power boost
+ Multifunction (hammer/high flow) circuit with electrical proportional control (n.a. on CX250E Long Reach)
+ Auto travel speed change
+ 4 selectable work modes
+ Overload warning device
+ ISO pattern controls
+ Pre-set auxiliary pump settings
+ Switch controlled auxiliary selection
+ Auxiliary valve
+ Hydraulic filter restriction indicator
+ Oil cooler
+ 5,000 hour hydraulic oil change interval
+ 2,000 hour hydraulic filter change interval
+ Hydraulic quick coupler provision
+ Hydraulic fluid supply port with air breather

UPPERSTRUCTURE
+ ISO mirrors
+ Handrail – RH access
+ ISO guard rails
+ Isolation mounted cab (fluid and spring)
+ Lifting eyes for counterweight
+ Lockable fuel cap, service doors and toolbox
+ Rear and side view safety camera

OPERATOR STATION
+ ROPS protection
+ FOPS guard OPG level 2
+ Pressurized cab
+ Tempered safety glass
+ One-touch lock front window
+ Sun visor & rain deflector
+ A/C, heating and defrosting with automatic control
+ Luch box & cool box, cup holders & ashtray
+ Interior dome light
+ Multi-adjustable low frequency air suspension console and tiltable heated seat with air springs and double acting hydraulic damper
+ Sliding seat – 90 mm
+ Seat belt with fasten detection
+ Adjustable armrests
+ Low-effort joystick controls
+ Sliding cockpit - 80 mm
+ Auxiliary select system
+ Aux-in port for personal electronics
+ Multifunction LED color monitor (10”), with silicon switches
+ 22 selectable languages for monitor
+ Anti-theft system (start code system)
+ Split type floor mat
+ 12V electric socket
+ 24V cigarette lighter
+ One-piece right hand window
+ 8 LED work lights (2 cab roof, 1 LH boom, 1 toolbox, 4 all-around)
+ Windshield wiper / washer
+ Clear (Lexan) roof window with sunshade
+ Storage compartments
+ On-board diagnostic system
+ Travel alarm
+ DAB+ Bluetooth radio with antenna and 2 speakers

ATTACHMENTS
+ Standard boom 5.85 m [CX250E] or 6.15 m [CX300E]
+ Long reach boom 10.3 m [CX250E Long Reach]
+ Arm 3.00 m [CX250E] or 3.18 m [CX300E]
+ Long reach arm 8.0 m [CX250E Long Reach]
+ Attachment types and names storable in the display

UNDERCARRIAGE
+ 600 mm steel triple grouser shoes
+ Full overlap turntable bearing tub
+ Sealed link chain
+ Lashing points

TELEMATICS
+ SiteConnect module and 3 years advanced SiteWatch subscription with remote monitoring

OPTIONAL EQUIPMENT

ENGINE
+ Engine precleaner cyclonic type
+ Reversible fan [CX250E]

HYDRAULICS
+ Clamshell circuit
+ Low-flow circuit, proportional control
+ Double acting circuit with electrical proportional control [only on CX250E Long Reach]

UPPERSTRUCURE
+ Hydraulic and engine oil sampling ports
+ Automatic greasing system [n.a. on CX250E Long Reach]

OPERATOR STATION
+ Front cab guard - vertical bars (OPG level 2)
+ Front cab guard - vertical bars (OPG level 1)
+ Front mesh screen, available as DIA kit
+ Rain deflector
+ CASE Maximum View Monitor - 270° view with additional left side camera
+ 12 LED Deluxe work lights (4 cab roof, 1 LH boom, 1 RH boom, 1 boom foot, 1 toolbox, 4 all-around)
+ Steelwrist-ready tiltrotator provision

ATTACHMENTS
+ Arm HD 2.50 / 3.52 m [CX250E] or 2.65 / 3.66 m [CX300E]

UNDERCARRIAGE
+ 700 / 800 mm steel triple grouser shoes
+ 900 mm steel triple grouser shoes [for swampy grounds, only on CX250E LC]
+ Triple track guide

SPECIFICATIONS
CX250E

ENGINE
Model _____ FPT NEF6 (F4HGE613P*V)
Type _____ Water-cooled, 4-cycle diesel, 6-cylinder in line, High pressure common rail system (electric control), Turbocharger with air cooled intercooler, SCRoF, EGR free.
Number of cylinders / Displacement (l) _____ 6 / 6.7
Emissions level _____ Stage V
Bore and stroke (mm) _____ 104 x 132
Rated flywheel horse power
ISO 9249 (kW) _____ 133.4 at 2000 min^{-1} (rpm)
ISO 14396 (kW) _____ 138.0 at 2000 min^{-1} (rpm)
Maximum torque
ISO 9249 (Nm) _____ 642 at 1800 min^{-1} (rpm)
ISO 14396 (Nm) _____ 659 at 1800 min^{-1} (rpm)

HYDRAULIC SYSTEM
Main pumps _____ 2 variable displacement axial piston pumps with regulating system
Max. oil flow (l/min) _____ 2 x 234 at 2000 min^{-1}
Working circuit pressure
Boom/Arm/Bucket (MPa) _____ 34.3 - 37.3 with auto power boost
Swing circuit (LC/NLC) (MPa) _____ 28.9
Swing circuit (LR) (MPa) _____ 27.0
Travel circuit (MPa) _____ 34.3
Pilot pump _____ 1 gear pump
Max. oil flow (l/min) _____ 20
Working circuit pressure (MPa) _____ 3.9
Boom cylinders
Bore (mm) _____ 130
Stroke (mm) _____ 1335
Arm cylinder
Bore (LC/NLC) (mm) _____ 145
Bore (LR) (mm) _____ 150
Stroke (LC/NLC) (mm) _____ 1660
Stroke (LR) (mm) _____ 1737
Bucket cylinder
Bore (LC/NLC) (mm) _____ 130
Bore (LR) (mm) _____ 95
Stroke (LC/NLC) (mm) _____ 1070
Stroke (LR) (mm) _____ 881

SWING
Swing motor _____ Fixed displacement axial piston motor
Maximum swing speed (LC/NLC) (min^{-1}) _____ 7.6
Maximum swing speed (LR) (min^{-1}) _____ 5.4
Swing torque (LC/NLC) (kNm) _____ 74.9
Swing torque (LR) (kNm) _____ 69.9

FILTERS
Suction filter (µm) _____ 105
Return filter (µm) _____ 6
Pilot line filter (µm) _____ 8

ELECTRICAL SYSTEM
Voltage (V) _____ 24
Alternator (Amp) _____ 90
Starter (V - kW) _____ 24 - 4.0
Battery _____ 2 x 12 V 92 Ah/5HR

UNDERCARRIAGE
Travel motor _____ Variable displacement axial piston motor
High travel speed
(Automatic travel speed shifting) (km/h) _____ 5.5
Low travel speed (km/h) _____ 3.5
Drawbar pull (kN) _____ 201
Number of carrier rollers (each side) _____ 2
Number of track rollers (each side) _____ 9
Number of shoes (each side) _____ 51
Type of shoes _____ Triple grouser shoes
Gradeability _____ 70% (35°)

NOISE
External guaranteed sound level
(EU Directive 2000/14/EC) (dB(A)) _____ LwA 101
Operator cab sound pressure level (ISO 6396) (dB(A)) __ LpA 67

CIRCUIT AND COMPONENT CAPACITIES
Fuel tank (l) _____ 410
Hydraulic system (l) _____ 290
Hydraulic tank (l) _____ 162
AdBlue tank (l) _____ 84

PERFORMANCE DATA			Arm 3.00 m	Arm 2.50 m	Arm 3.52 m
	Boom length	mm	5850	5850	5850
	Bucket radius	mm	1570	1570	1570
	Bucket wrist action	°	175°	175°	175°
A	Maximum reach at GRP	mm	10100	9630	10620
B	Maximum reach	mm	10280	9820	10790
C	Max. digging depth	mm	6900	6400	7420
D	Max. digging height	mm	9760	9560	10070
E	Max. dumping height	mm	6760	6550	7060
F	Min. swing radius	mm	4030	3980	4050

DIGGING FORCE (ISO 6015)		Arm 3.00 m	Arm 2.50 m	Arm 3.52 m
Arm digging force	kN	120	141	107
with Auto power boost	kN	130	153	116
Bucket digging force	kN	162	162	162
with Auto power boost	kN	176	176	176

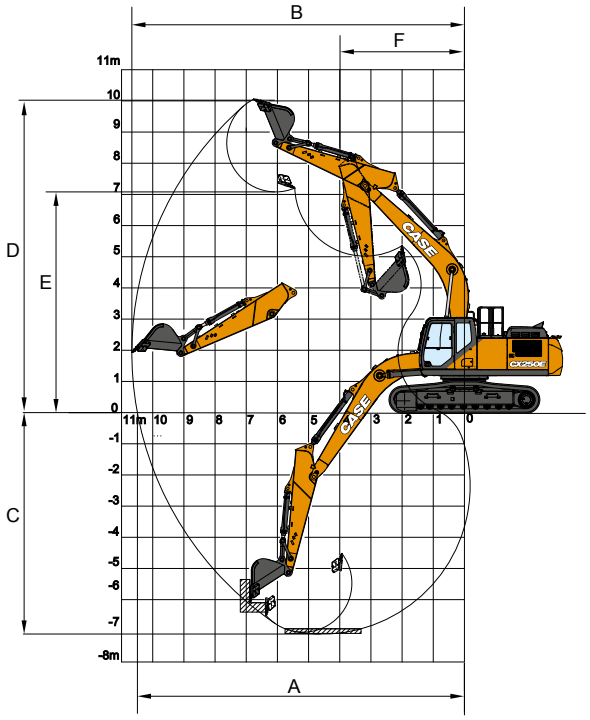

SPECIFICATIONS
CX250E LC-NLC

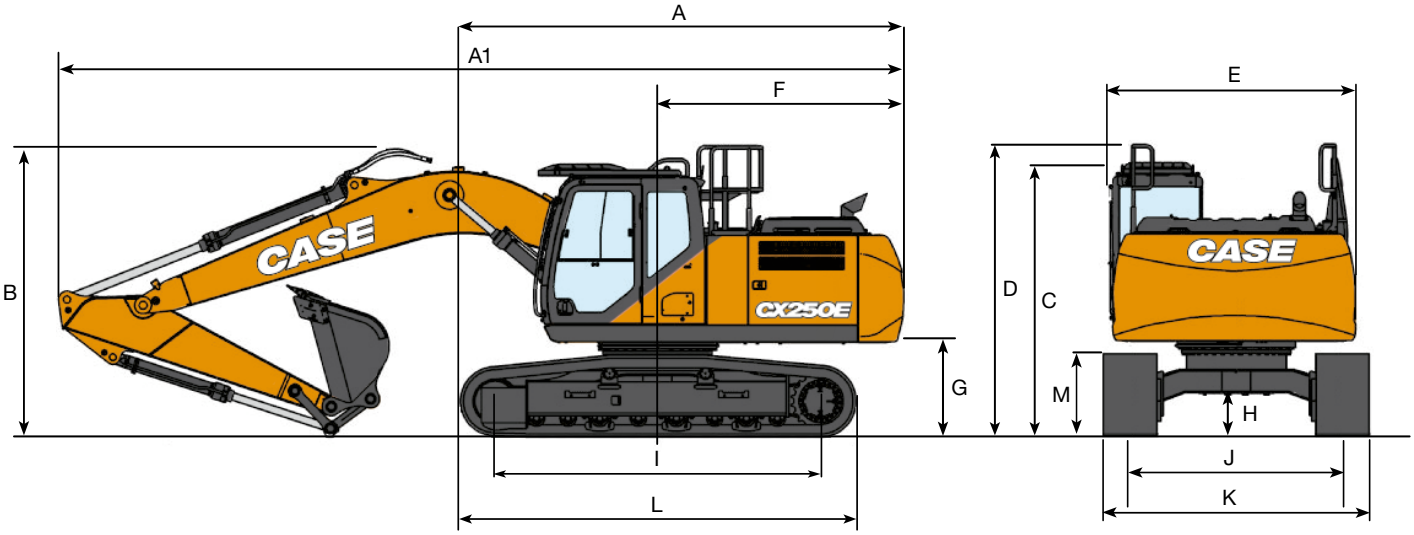

GENERAL DIMENSIONS		Arm 3.00 m	HD arm 2.50 m	Arm 3.52 m
A Overall length (without attachment)	mm	5320	5320	5320
A1 Overall length (with attachment)	mm	9930	10000	9960
B Overall height (to top of boom)	mm	3210	3380	3380
C Cab height	mm	3130	3130	3130
D Overall height (to top of guardrail)	mm	3220	3220	3220
E Upper structure overall width (LC/NLC)	mm	2770	2770	2770
F Swing (rear end radius)	mm	2990	2990	2990
G Clearance height under upper structure	mm	1110	1110	1110
H Minimum ground clearance	mm	440	440	440
I Wheel base (center to center of wheels)	mm	3840	3840	3840
J Track gauge (LC/NLC)	mm	2590 / 2390	2590 / 2390	2590 / 2390
K Undercarriage overall width (LC/NLC with 600 mm shoes)	mm	3190 / 2990	3190 / 2990	3190 / 2990
L Crawler overall length	mm	4650	4650	4650
M Crawler tracks height	mm	940	940	940

WEIGHT AND GROUND PRESSURE

With 3.00 m arm, 1.1 m³ bucket, operator, lubricant, coolant, full fuel tank and FOPS protection level 2.

LC	Weight	Ground pressure
600 mm grouser shoes	25300 kg	0.050 MPa
700 mm grouser shoes	25600 kg	0.044 MPa
800 mm grouser shoes	25900 kg	0.039 MPa
900 mm grouser shoes	26300 kg	0.035 MPa

NLC	Weight	Ground pressure
600 mm grouser shoes	25200 kg	0.050 MPa
700 mm grouser shoes	25500 kg	0.043 MPa

Counterweight: 5050 kg

HAMMER
CX250E

DIRECT FIT

Model	Install Weight kg	Reference machine settings		Arm 2.50 m	Arm 3.00 m	Arm 3.52 m
		Flow l/min	Relief Pressure Mpa			
CB BREAKER						
CB290S	1500	145	21-22	☐	☐	☐
CB370S	1800	160	19-21	☐	☐	—

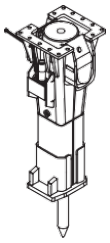

☐ Applicable
— Not applicable

☐ Applicable with condition (only for light duty works as residential construction or utilities maintenance)

LIFTING CAPACITY
CX250E LC-NLC

REACH	2.0 m		4.0 m		6.0 m		8.0 m		At max reach		
Front / Side											m
LC UNDERCARRIAGE - Standard arm 3.00 m, 600 mm shoes, max reach 8.71 m											
8.0 m					5570*	5570*			4710*	4710*	6.17
6.0 m									4210*	4210*	7.67
4.0 m					7600*	6830	6330	4380	4140*	4000	8.45
2.0 m			14230*	11510	9150*	6400	6160	4230	4330*	3720	8.71
0 m			16040*	10940	9210	6090	6020	4100	4870*	3780	8.5
-2.0 m	10360*	10360*	15590*	10880	9100	5990			6020*	4260	7.77
-4.0 m	19900*	19900*	13160*	11140	8640*	6150			7790*	5700	6.37
LC UNDERCARRIAGE - Short arm 2.50 m, 600 mm shoes, max reach 8.25 m											
8.0 m									6920*	6920*	5.50
6.0 m					7100*	7050			6070*	5290	7.14
4.0 m			11180*	11180*	8120*	6730			5950*	4350	7.97
2.0 m					9480	6330	6130	4200	5860	4020	8.24
0 m			14210*	10900	9190	6070	6040	4120	6020	4110	8.02
-2.0 m	10890*	10890*	15110*	10950	9140	6020			6960	4710	7.25
-4.0 m			12010*	11290					8010*	6720	5.72
LC UNDERCARRIAGE - Long arm 3.52 m, 600 mm shoes, max reach 9.21 m											
8.0 m									3740*	3740*	6.87
6.0 m							4510*	4500	3380*	3380*	8.24
4.0 m					6990*	6900	6280*	4400	3310*	3310*	8.97
2.0 m			13140*	11720	8640*	6430	6150	4220	3440*	3390	9.21
0 m			15660*	10930	9190	6060	5980	4050	3820*	3430	9.01
-2.0 m	9280*	9280*	15810*	10760	9020	5910	5920	4000	4590*	3800	8.34
-4.0 m	16710*	16710*	14000*	10930	9110	5980			6480*	4860	7.05
NLC UNDERCARRIAGE - Standard arm 3.00 m, 600 mm shoes, max reach 8.71 m											
8.0 m					5570*	5570*			4710*	4710*	6.17
6.0 m									4210*	4210*	7.67
4.0 m					7600*	6280	6310	4030	4140*	3680	8.45
2.0 m			14230*	10390	9150*	5850	6140	3880	4330*	3420	8.71
0 m			16040*	9830	9180	5550	6000	3750	4870*	3460	8.50
-2.0 m	10360*	10360*	15590*	9780	9070	5450			6020*	3890	7.77
-4.0 m	19900*	19900*	13160*	10020	8640*	5610			7790*	5210	6.37
NLC UNDERCARRIAGE - Short arm 2.50 m, 600 mm shoes, max reach 8.25 m											
8.0 m									6920*	6920*	5.50
6.0 m					7100*	6490			6070*	4870	7.14
4.0 m			11180*	11180*	8120*	6180			5950*	4000	7.97
2.0 m					9450	5790	6110	3860	5840	3690	8.24
0 m			14210*	9800	9160	5530	6020	3770	6000	3760	8.02
-2.0 m	10890*	10890*	15110*	9850	9110	5490			6940	4310	7.25
-4.0 m			12010*	10170					8010*	6130	5.72
NLC UNDERCARRIAGE - Long arm 3.52 m, 600 mm shoes, max reach 9.21 m											
8.0 m									3740*	3740*	6.87
6.0 m							4510*	4150	3380*	3380*	8.24
4.0 m					6990*	6340	6280*	4050	3310*	3310*	8.97
2.0 m			13140*	10580	8640*	5890	6130	3870	3440*	3110	9.21
0 m			15660*	9820	9170	5530	5960	3710	3820*	3140	9.01
-2.0 m	9280*	9280*	15810*	9650	8990	5370	5900	3660	4590*	3470	8.34
-4.0 m	16710*	16710*	14000*	9820	9080	5450			6480*	4440	7.05

* The above loads (kg) are compliant to the ISO standards and refer to the excavator equipped without bucket. The indicated loads are no more than 87% of hydraulic system lift capacity or 75% of static tipping load. Values marked with an asterisk (*) are limited by the hydraulic lifting capacity.

BUCKETS
CX250E LC-NLC

LC DIRECT FIT

Capacity m³ (ISO7451 HEAPED)	Width mm	Weight kg	Arm 2.50 m	Arm 3.00 m	Arm 3.52 m
HEAVY DUTY BUCKETS					
0.50	600	660	○	○	○
0.67	750	750	○	○	○
0.85	900	920	○	○	○
1.10	1100	1020	○	○	○
1.22	1200	1050	○	○	●
1.40	1350	1120	○	●	▲
1.61	1500	1200	●	▲	■
1.70	1600	1280	▲	■	-
ROCK BUCKETS					
0.49	600	870	○	○	○
0.66	750	960	○	○	○
0.84	900	1080	○	○	○
0.96	1000	1140	○	○	○
1.02	1050	1170	○	○	●
1.20	1200	1280	○	●	▲
1.39	1350	1360	●	▲	■
1.58	1500	1460	▲	■	-
GRADING BUCKETS					
1.38	1800	890*	○	●	▲
1.64	2100	980*	●	▲	■
1.90	2400	1090*	▲	■	-
DITCH CLEANING BUCKETS					
0.89	1830	910*	○	○	●
1.48	2130	1020*	○	●	▲
TILTABLE DITCH CLEANING BUCKETS					
1.13	1800	1100*	○	○	●
1.25	2000	1160*	○	●	▲
1.38	2200	1250*	●	▲	■
1.51	2400	1310*	▲	■	-
1.57	2500	1370*	■	■	-

NLC DIRECT FIT

Capacity m³ (ISO7451 HEAPED)	Width mm	Weight kg	Arm 2.50 m	Arm 3.00 m	Arm 3.52 m
HEAVY DUTY BUCKETS					
0.50	600	660	○	○	○
0.67	750	750	○	○	○
0.85	900	920	○	○	○
1.10	1100	1020	○	○	●
1.22	1200	1050	○	●	▲
1.40	1350	1120	●	▲	■
1.61	1500	1200	▲	■	-
1.70	1600	1280	■	-	-
ROCK BUCKETS					
0.49	600	870	○	○	○
0.66	750	960	○	○	○
0.84	900	1080	○	○	○
0.96	1000	1140	○	○	●
1.02	1050	1170	○	●	▲
1.20	1200	1280	●	▲	■
1.39	1350	1360	▲	■	-
1.58	1500	1460	■	-	-
GRADING BUCKETS					
1.38	1800	890*	○	●	▲
1.64	2100	980*	●	■	■
1.90	2400	1090*	■	-	-
DITCH CLEANING BUCKETS					
0.89	1830	910*	○	●	●
1.48	2130	1020*	●	▲	■
TILTABLE DITCH CLEANING BUCKETS					
1.13	1800	1100*	○	●	▲
1.25	2000	1160*	●	▲	■
1.38	2200	1250*	▲	■	-
1.51	2400	1310*	■	■	-
1.57	2500	1370*	■	-	-

Tilt angle 45° L/R - Connect to Low-Flow Auxiliary Hydraulic Circuit

LC QUICK COUPLED

Capacity m³ (ISO7451 HEAPED)	Width mm	Weight kg	Arm 2.50 m	Arm 3.00 m	Arm 3.52 m
HEAVY DUTY BUCKETS					
0.50	600	660	○	○	○
0.67	750	750	○	○	○
0.85	900	920	○	○	●
1.10	1100	1020	○	●	▲
1.22	1200	1050	●	●	■
1.40	1350	1120	●	■	-
1.61	1500	1200	▲	■	-
1.70	1600	1280	■	-	-
ROCK BUCKETS					
0.49	600	870	○	○	○
0.66	750	960	○	○	○
0.84	900	1080	○	○	●
0.96	1000	1140	○	○	●
1.02	1050	1170	○	●	■
1.20	1200	1280	●	■	-
1.39	1350	1360	▲	■	-
1.58	1500	1460	■	-	-
GRADING BUCKETS					
1.38	1800	890*	●	▲	■
1.64	2100	980*	▲	■	-
1.90	2400	1090*	■	-	-
DITCH CLEANING BUCKETS					
0.89	1830	910*	○	●	■
1.48	2130	1020*	●	■	-

NLC QUICK COUPLED

Capacity m³ (ISO7451 HEAPED)	Width mm	Weight kg	Arm 2.50 m	Arm 3.00 m	Arm 3.52 m
HEAVY DUTY BUCKETS					
0.50	600	660	○	○	○
0.67	750	750	○	○	○
0.85	900	920	○	○	●
1.10	1100	1020	●	●	■
1.22	1200	1050	●	■	-
1.40	1350	1120	▲	■	-
1.61	1500	1200	■	-	-
ROCK BUCKETS					
0.49	600	870	○	○	○
0.66	750	960	○	○	○
0.84	900	1080	○	○	●
0.96	1000	1140	○	●	▲
1.02	1050	1170	●	▲	■
1.20	1200	1280	▲	■	-
1.39	1350	1360	■	-	-
GRADING BUCKETS					
1.38	1800	890*	●	■	-
1.64	2100	980*	■	-	-
DITCH CLEANING BUCKETS					
0.89	1830	910*	●	▲	■
1.48	2130	1020*	▲	■	-

○ Rated material density up to 2 ton/m³
● Rated material density up to 1.6 ton/m³
▲ Rated material density up to 1.4 ton/m³
■ Rated material density up to 1.2 ton/m³
— Not applicable
* with bolt-on cutting edge

SPECIFICATIONS
CX250E LONG REACH

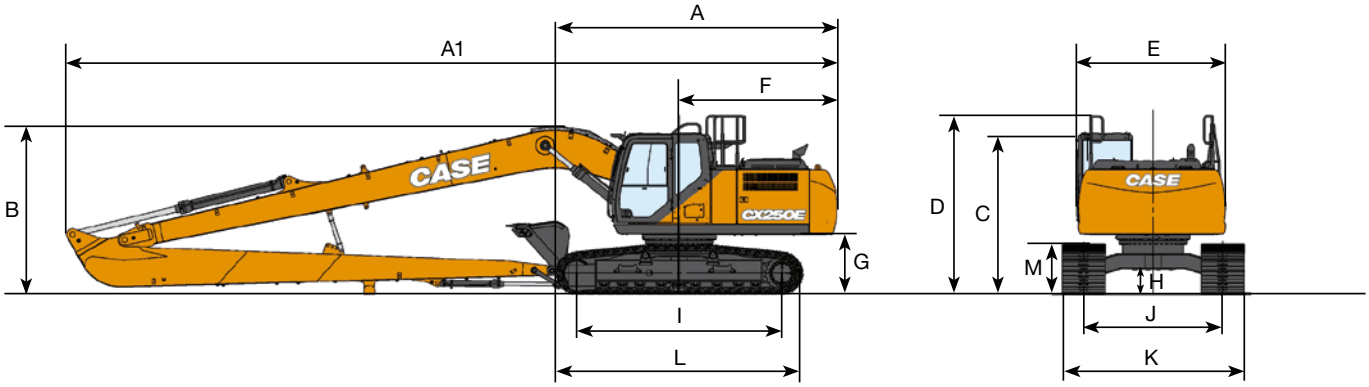

GENERAL DIMENSIONS			Arm 8.00 m
A	Overall length (without attachment)	mm	5310
A1	Overall length (with attachment)	mm	14460
B	Overall height (to top of boom)	mm	3190
C	Cab height	mm	3130
D	Overall height (to top of handrail)	mm	3220
E	Upper structure overall width	mm	2760
F	Swing (rear end radius)	mm	2990
G	Clearance height under upper structure	mm	1100
H	Minimum ground clearance	mm	440
I	Wheel base (center to center of wheels)	mm	3840
J	Track gauge	mm	2590
K	Undercarriage overall width (with 800 mm shoes)	mm	3390
L	Crawler overall length	mm	4650
M	Crawler tracks height	mm	940

DIGGING FORCE (ISO 6015)		Arm 8.00 m
Arm digging force	kN	40
Bucket digging force	kN	77

PERFORMANCE DATA			Arm 8.00 m
	Boom length	mm	10300
	Bucket radius	mm	1200
	Bucket wrist action	°	178
A	Maximum reach at GRP	mm	18220
B	Maximum reach	mm	18320
C	Max. digging depth	mm	14560
D	Max. digging height	mm	13950
E	Max. dumping height	mm	11780
F	Min. swing radius	mm	6290

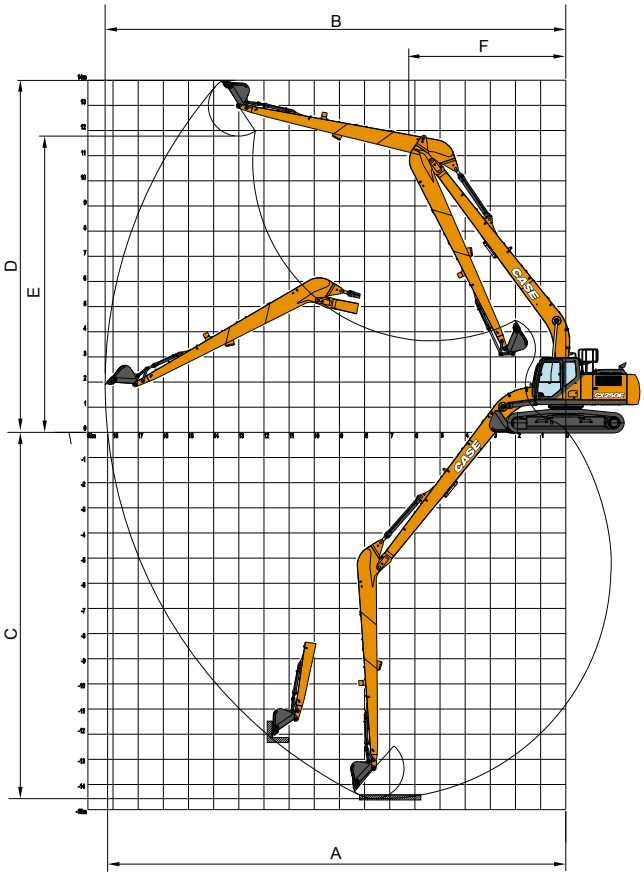

WEIGHT AND GROUND PRESSURE

With 8.00 m arm, 0.37 m³ bucket, 800 mm grouser shoes, operator, lubricant, coolant, full fuel tank and FOPS protection level 2.

	Weight	Ground pressure
LR	29200 kg	0.043 MPa

Counterweight: 7350 kg

LIFTING CAPACITY
CX250E LONG REACH

LC UNDERCARRIAGE - Super long arm 8.00 m, 800 mm shoes, max reach 17.10 m

REACH	0.0 m		2.0 m		4.0 m		6.0 m		8.0 m		10.0 m		12.0 m		14.0 m		16.0 m		At max reach		
Front / Side																					m
12.0 m																			1730*	1730*	13.79
10.0 m															1940*	1940*			1680*	1680*	15.06
8.0 m															1990*	1990*			1680*	1680*	15.98
6.0 m													2220*	2220	2120*	2120*	2070*	1680	1710*	1520	16.61
4.0 m											2780*	2780*	2490*	2490	2300*	2120	2180*	1600	1770*	1390	16.98
2.0 m					4240*	4240*	5510*	5510*	4030*	4030*	3260*	3260*	2800*	2580	2500*	1970	2310*	1510	1880*	1300	17.11
0 m					2380*	2380*	6760*	6100	4760*	4220	3720*	3100	3100*	2360	2710*	1820	2270	1420	2030*	1260	17.01
-2.0 m			1520*	1520	2580*	2580*	5520*	5510	5330*	3810	4110*	2830	3370*	2170	2710	1700	2200	1350	2060	1260	16.66
-4.0 m	2030*	2030*	2240*	2240	3180*	3180*	5540*	5250	5680*	3570	4210	2650	3270	2050	2620	1620	2160	1320	2150	1310	16.06
-6.0 m	2650*	2650*	3000*	3000	3980*	3980*	6240*	5210	5640	3480	4120	2560	3210	1990	2590	1590			2330	1430	15.17
-8.0 m	3340*	3340*	3840*	3840	4960*	4960*	7440*	5310	5670	3510	4130	2570	3220	2000					2650	1640	13.94
-10.0 m			4790*	4790	6200*	6200*	7070*	5540	5330*	3650	4170*	2680	3290*	2110					3180*	2060	12.26
-12.0 m					7860*	7860*	5900*	5900*	4470*	3920									3430*	2950	9.91

* The above loads (kg) are compliant to the ISO standards and refer to the excavator equipped without bucket. The indicated loads are no more than 87% of hydraulic system lift capacity or 75% of static tipping load. Values marked with an asterisk (*) are limited by the hydraulic lifting capacity.

BUCKETS
CX250E LONG REACH

DIRECT FIT

Capacity m³ (ISO7451 HEAPED)	Width mm	Weight kg	Arm 8.00 m
GENERAL PURPOSE BUCKETS			
0.21	450	250	○
0.31	600	290	○
0.41	750	330	○
0.52	900	360	●
GRADING BUCKET			
0.46	1500	440*	▲
DITCH CLEANING BUCKET			
0.54	1830	480*	▲
TILTABLE DITCH CLEANING BUCKET			
0.46	1500	640*	■

Tilt angle 45° L/R - Connect to Low-Flow Auxiliary Hydraulic Circuit

QUICK COUPLED

Capacity m³ (ISO7451 HEAPED)	Width mm	Weight kg	Arm 8.00 m
GENERAL PURPOSE BUCKETS			
0.21	450	250	○
0.31	600	280	○
0.41	750	310	●
0.52	900	360	▲
DITCH CLEANING BUCKET			
0.54	1830	480*	■

○ Rated material density up to 2 ton/m³
● Rated material density up to 1.6 ton/m³
▲ Rated material density up to 1.4ton/m³
■ Rated material density up to 1.2 ton/m³
— Not applicable
* with bolt-on cutting edge

SPECIFICATIONS
CX300E

ENGINE
Model _____ FPT NEF6 (F4HGE6138*V)
Type _____ Water-cooled, 4-cycle diesel, 6-cylinder in line, High pressure common rail system (electric control), Turbocharger with air cooled intercooler, SCRoF, EGR free.
Number of cylinders / Displacement (l) _____ 6 / 6.7
Bore and stroke (mm) _____ 115 x 125
Rated flywheel horse power
ISO 9249 (kW) _____ 193.4 at 1900 min^{-1} (rpm)
ISO 14396 (kW) _____ 204 at 1900 min^{-1} (rpm)
Maximum torque
ISO 9249 (Nm) _____ 999 at 1500 min^{-1} (rpm)
ISO 14396 (Nm) _____ 1033 at 1500 min^{-1} (rpm)

HYDRAULIC SYSTEM
Main pumps _____ 2 variable displacement axial piston pumps with regulating system
Max. oil flow (liter/min) _____ 2 x 256 at 1900 min^{-1}
Working circuit pressure
Boom/Arm/Bucket (MPa) _____ 34.3 - 37.3 with auto power boost
Swing circuit (MPa) _____ 30.4
Travel circuit (MPa) _____ 34.3
Pilot pump (liter/min) _____ 27
Working circuit pressure (MPa) _____ 3.9
Boom cylinders
Bore (mm) _____ 140
Stroke (mm) _____ 1369
Arm cylinder
Bore (mm) _____ 150
Stroke (mm) _____ 1650
Bucket cylinder
Bore (mm) _____ 135
Stroke (mm) _____ 1078

SWING
Swing motor _____ Fixed displacement axial piston motor
Maximum swing speed (min^{-1}) _____ 7.5
Swing torque (kNm) _____ 92.1

FILTERS
Suction filter (µm) _____ 105
Return filter (µm) _____ 6
Pilot line filter (µm) _____ 8

ELECTRICAL SYSTEM
Voltage (V) _____ 24
Alternator (Amp) _____ 90
Starter (V - kW) _____ 24 - 4.0
Battery _____ 2 x 12 V 128 Ah/5HR

UNDERCARRIAGE
Travel motor _____ Variable displacement axial piston motor
High travel speed
(Automatic travel speed shifting) (km/h) _____ 5.4
Low travel speed (km/h) _____ 3.2
Drawbar pull (kN) _____ 247
Number of carrier rollers (each side) _____ 2
Number of track rollers (each side) _____ 8
Number of shoes (each side) _____ 50
Type of shoes _____ Triple grouser shoes
Gradeability _____ 70% (35°)

NOISE
External guaranteed sound level
(EU Directive 2000/14/EC) (dB(A)) _____ LwA 103
Operator cab sound pressure level
(ISO 6396) (dB(A)) _____ LpA 67

CIRCUIT AND COMPONENT CAPACITIES
Fuel tank (l) _____ 478
Hydraulic system (l) _____ 300
Hydraulic tank (l) _____ 173
AdBlue tank (l) _____ 84

PERFORMANCE DATA		Arm 3.18 m	Arm 2.65 m	Arm 3.66 m
Boom length	mm	6150	6150	6150
Bucket radius	mm	1570	1570	1570
Bucket wrist action		176°	176°	176°
A Maximum reach at GRP	mm	10490	10030	10980
B Maximum reach	mm	10670	10220	11160
C Max. digging depth	mm	7100	6570	7580
D Max. digging height	mm	10050	9930	10390
E Max. dumping height	mm	7080	6930	7390
F Min. swing radius	mm	4030	3980	4080

DIGGING FORCE (ISO 6015)		Arm 3.18 m	Arm 2.65 m	Arm 3.66 m
Arm digging force	kN	128.4	147.0	114.3
with Auto power boost	kN	139.6	159.9	124.3
Bucket digging force	kN	175.0	175.0	175.0
with Auto power boost	kN	190.3	190.3	190.3

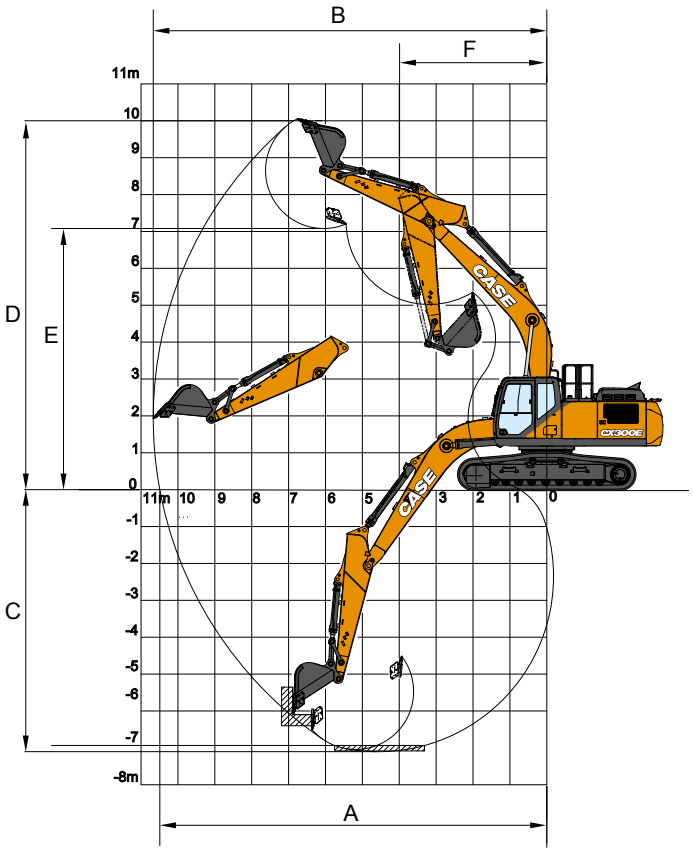

SPECIFICATIONS
CX300E LC-NLC

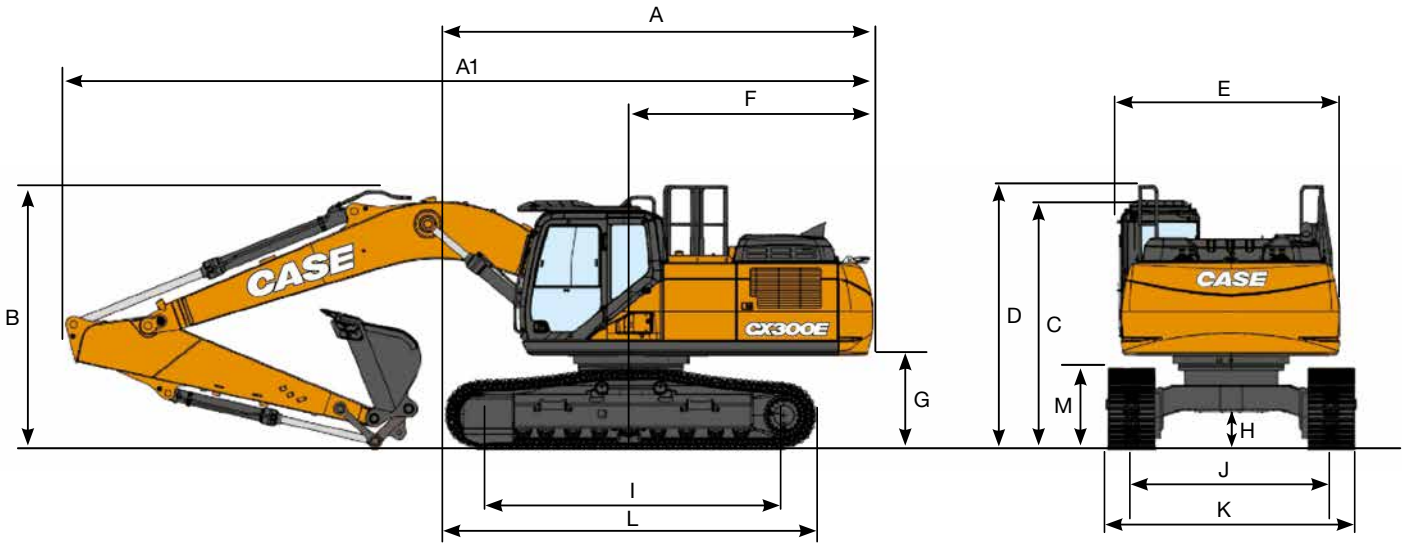

GENERAL DIMENSIONS			Arm 3.18 m	Arm 2.65 m	Arm 3.66 m
A	Overall length (without attachment)	mm	5680	5680	5680
A1	Overall length (with attachment)	mm	10610	10620	10600
B	Overall height (to top of boom)	mm	3330	3320	3420
C	Cab height	mm	3210	3210	3210
D	Overall height (to top of guardrail)	mm	3300	3300	3300
E	Upper structure overall width	mm	2900	2900	2900
F	Swing (rear end radius)	mm	3290	3290	3290
G	Clearance height under upper structure	mm	1190	1190	1190
H	Minimum ground clearance	mm	450	450	450
I	Wheel base (center to center of wheels)	mm	3980	3980	3980
J	Track gauge (LC/NLC)	mm	2600 / 2390	2600 / 2390	2600 / 2390
K	Undercarriage overall width (LC/NLC with 600 mm shoes)	mm	3200 / 2990	3200 / 2990	3200 / 2990
L	Crawler overall length	mm	4850	4850	4850
M	Crawler tracks height	mm	1040	1040	1040

WEIGHT AND GROUND PRESSURE

With 3.18 m arm, 1.1 m^3 bucket, 600 mm grouser shoes, operator, lubricant, coolant, full fuel tank and FOPS protection level 2.

	WEIGHT	GROUND PRESSURE
LC	29700 kg	0.057 MPa
NLC	29600 kg	0.057 MPa

Counterweight: 4900 kg

LIFTING CAPACITY
CX300E LC-NLC

REACH	2.0 m		4.0 m		6.0 m		8.0 m		At max reach		
Front / Side											m
LC UNDERCARRIAGE - Standard arm 3.18 m, 600 mm shoes, max reach 9.10 m											
8.0 m									6090*	6090*	6.72
6.0 m							6320*	5400	5690*	5260	8.12
4.0 m			13360*	13360*	9650*	8140	7760	5270	5740*	4480	8.85
2.0 m			15990*	13630	11420*	7610	7520	5050	6140*	4180	9.10
0 m			13750*	13000	11250	7230	7330	4880	6310	4230	8.89
-2.0 m	9910*	9910*	18240*	12950	11100	7100	7280	4830	7050	4690	8.19
-4.0 m	18660*	18660*	14980*	13200	10300*	7220			8470*	6070	6.85
LC UNDERCARRIAGE - Short arm 2.65 m, 600 mm shoes, max reach 8.65 m											
8.0 m					8470*	8470*			7990*	7990*	6.09
6.0 m					8950*	8500			7350*	5810	7.61
4.0 m			14890*	14870	10320*	8080	7740	5260	7170	4880	8.39
2.0 m					11640	7590	7540	5080	6720	4540	8.65
0 m			11810*	11810*	11290	7280	7390	4940	6880	4620	8.42
-2.0 m	10300*	10300*	17500*	13140	11210	7210			7830	5210	7.68
-4.0 m			13580*	13460	9220*	7420			8610*	7060	6.24
LC UNDERCARRIAGE - Long arm 3.66 m, 600 mm shoes, max reach 9.58 m											
8.0 m									4880*	4880*	7.37
6.0 m							6540*	5440	4560*	4560*	8.66
4.0 m					9000*	8210	7720*	5270	4570*	4080	9.35
2.0 m			16980*	13830	10890*	7630	7510	5030	4830*	3820	9.58
0 m			14390*	12940	11220	7190	7280	4820	5420*	3850	9.39
-2.0 m	8870*	8870*	18650*	12770	11000	6990	7170	4730	6360	4220	8.73
-4.0 m	15860*	15860*	15990*	12950	10910*	7050			7990	5260	7.49
-6.0 m									8060*	8060*	4.86
NLC UNDERCARRIAGE - Standard arm 3.18 m, 600 mm shoes, max reach 9.10 m											
8.0 m									6090*	6090*	6.72
6.0 m							6320*	4960	5690*	4840	8.12
4.0 m			13360*	13360*	9650*	7460	7740	4840	5740*	4110	8.85
2.0 m			15990*	12240	11420*	6940	7510	4630	6140*	3820	9.10
0 m			13750*	11630	11230	6570	7320	4450	6290	3860	8.89
-2.0 m	9910*	9910*	18240*	11580	11080	6440	7270	4410	7040	4280	8.19
-4.0 m	18660*	18660*	14980*	11820	10300*	6560			8470*	5530	6.85
NLC UNDERCARRIAGE - Short arm 2.65 m. 600 mm shoes. max reach 8.65 m											
8.0 m					8470*	7880			7990*	7680	6.09
6.0 m					8950*	7810			7350*	5350	7.61
4.0 m			14890*	13430	10320*	7400	7720	4830	7160	4480	8.39
2.0 m					11620	6920	7530	4650	6700	4160	8.65
0 m			11810*	11710	11270	6620	7380	4520	6860	4230	8.42
-2.0 m	10300*	10300*	17500*	11770	11190	6550			7810	4760	7.68
-4.0 m			13580*	12080	9220*	6760			8610*	6440	6.24
NLC UNDERCARRIAGE - Long arm 3.66 m, 600 mm shoes, max reach 9.58 m											
8.0 m									4880*	4880*	7.37
6.0 m							6540*	5010	4560*	4350	8.66
4.0 m					9000*	7530	7720*	4840	4570*	3740	9.35
2.0 m			16980*	12420	10890*	6960	7490	4600	4830*	3490	9.58
0 m			14390*	11570	11190	6530	7260	4390	5420*	3510	9.39
-2.0 m	8870*	8870*	18650*	11400	10970	6340	7160	4300	6350	3850	8.73
-4.0 m	15860*	15860*	15990*	11580	10910*	6390			7980	4790	7.49
-6.0 m									8060*	8060*	4.86

* The above loads (kg) are compliant to the ISO standards and refer to the excavator equipped without bucket. The indicated loads are no more than 87% of hydraulic system lift capacity or 75% of static tipping load. Values marked with an asterisk (*) are limited by the hydraulic lifting capacity.

BUCKETS
CX300E LC-NLC

LC DIRECT FIT

Capacity m³ (ISO7451 HEAPED)	Width mm	Weight kg	Arm 2.65 m	Arm 3.18 m	Arm 3.66 m
HEAVY DUTY BUCKETS					
0.51	600	660	○	○	○
0.68	750	750	○	○	○
0.85	900	1040	○	○	○
1.11	1100	1150	○	○	○
1.24	1200	1240	○	○	●
1.43	1350	1310	○	●	●
1.63	1500	1460	●	●	■
1.72	1600	1520	●	■	-
ROCK BUCKETS					
0.85	900	1080	○	○	○
0.96	1000	1140	○	○	○
1.02	1050	1170	○	○	○
1.11	1100	1190	○	○	○
1.24	1200	1280	○	○	●
1.43	1350	1360	○	●	▲
1.63	1500	1500	●	▲	■
GRADING BUCKETS					
1.38	1800	890*	○	○	●
1.64	2100	980*	○	●	▲
1.90	2400	1090*	●	▲	■
DITCH CLEANING BUCKETS					
0.89	1830	910*	○	○	○
1.48	2130	1020*	○	○	●
TILTABLE DITCH CLEANING BUCKETS					
1.13	1800	1100*	○	○	○
1.25	2000	1160*	○	○	●
1.38	2200	1250*	○	●	●
1.51	2400	1310*	●	●	▲
1.57	2500	1370*	●	▲	■

NLC DIRECT FIT

Capacity m³ (ISO7451 HEAPED)	Width mm	Weight kg	Arm 2.65 m	Arm 3.18 m	Arm 3.66 m
HEAVY DUTY BUCKETS					
0.51	600	660	○	○	○
0.68	750	750	○	○	○
0.85	900	1040	○	○	○
1.11	1100	1150	○	○	●
1.24	1200	1240	○	●	●
1.43	1350	1310	●	●	■
1.63	1500	1460	●	■	-
1.72	1600	1520	▲	■	-
ROCK BUCKETS					
0.85	900	1080	○	○	○
0.96	1000	1140	○	○	○
1.02	1050	1170	○	○	○
1.11	1100	1190	○	○	●
1.24	1200	1280	○	●	▲
1.43	1350	1360	●	▲	■
1.63	1500	1500	▲	■	-
GRADING BUCKETS					
1.38	1800	890*	○	○	●
1.64	2100	980*	●	●	■
1.90	2400	1090*	▲	■	-
DITCH CLEANING BUCKETS					
0.89	1830	910*	○	○	●
1.48	2130	1020*	○	●	▲
TILTABLE DITCH CLEANING BUCKETS					
1.13	1800	1100*	○	○	●
1.25	2000	1160*	○	●	▲
1.38	2200	1250*	●	●	■
1.51	2400	1310*	●	▲	■
1.57	2500	1370*	▲	■	-

Tilt angle 45° L/R - Connect to Low-Flow Auxiliary Hydraulic Circuit

○ Rated material density up to 2 ton/m³
● Rated material density up to 1.6 ton/m³
▲ Rated material density up to 1.4ton/m³
■ Rated material density up to 1.2 ton/m³
— Not applicable
* with bolt-on cutting edge

BUCKETS
CX300E LC-NLC

LC QUICK COUPLED

Capacity m³ (ISO7451 HEAPED)	Width mm	Weight kg	Arm 2.65 m	Arm 3.18 m	Arm 3.66 m
HEAVY DUTY BUCKETS					
0.51	600	660	○	○	○
0.68	750	750	○	○	○
0.85	900	1040	○	○	○
1.11	1100	1150	○	○	●
1.24	1200	1240	○	●	▲
1.43	1350	1310	●	▲	■
1.63	1500	1460	▲	■	-
1.72	1600	1520	■	-	-
ROCK BUCKETS					
0.85	900	1080	○	○	○
0.96	1000	1140	○	○	○
1.02	1050	1170	○	○	○
1.11	1100	1190	○	○	●
1.24	1200	1280	○	●	▲
1.43	1350	1360	●	▲	■
1.63	1500	1500	▲	■	-
GRADING BUCKETS					
1.38	1800	890*	○	●	●
1.64	2100	980*	●	▲	■
1.90	2400	1090*	▲	■	-
DITCH CLEANING BUCKETS					
0.89	1830	910*	○	○	●
1.48	2130	1020*	○	●	▲

NLC QUICK COUPLED

Capacity m³ (ISO7451 HEAPED)	Width mm	Weight kg	Arm 2.65 m	Arm 3.18 m	Arm 3.66 m
HEAVY DUTY BUCKETS					
0.51	600	660	○	○	○
0.68	750	750	○	○	○
0.85	900	1040	○	○	●
1.11	1100	1150	○	●	▲
1.24	1200	1240	●	▲	■
1.43	1350	1310	▲	■	-
1.63	1500	1460	■	-	-
ROCK BUCKETS					
0.85	900	1080	○	○	○
0.96	1000	1140	○	○	●
1.02	1050	1170	○	○	●
1.11	1100	1190	○	●	▲
1.24	1200	1280	●	▲	■
1.43	1350	1360	▲	■	-
1.63	1500	1500	■	-	-
GRADING BUCKETS					
1.38	1800	890*	●	●	■
1.64	2100	980*	▲	■	-
1.90	2400	1090*	■	-	-
DITCH CLEANING BUCKETS					
0.89	1830	910*	○	●	●
1.48	2130	1020*	●	▲	■

○ Rated material density up to 2 ton/m³
● Rated material density up to 1.6 ton/m³
▲ Rated material density up to 1.4ton/m³
■ Rated material density up to 1.2 ton/m³
— Not applicable
* with bolt-on cutting edge

HAMMER
CX300E

DIRECT FIT

Model	Install Weight kg	Reference machine settings		Arm 2.65 m	Arm 3.18 m	Arm 3.66 m
		Flow l/min	Relief Pressure Mpa			
CB BREAKER						
CB290S	1500	150	21-22	□	□	□
CB370S	1800	165	19-21	□	□	-

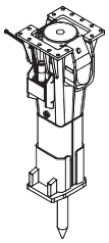

□ Applicable
— Not applicable
□ Applicable with condition (only for light duty works as residential construction or utilities maintenance)

EXPERTS FOR THE REAL WORLD
SINCE 1842

CASE CONSTRUCTION

BUILDING A STRONG CASE.

Since 1842, at CASE Construction Equipment we have lived by an unwavering commitment to build practical, intuitive solutions that deliver both efficiency and productivity.

We continually strive to make it easier for our customers to implement emerging technologies and new compliance mandates.

Today, our global scale combined with our local expertise enables us to keep customers' real-world challenges at the center of our product development.

The vast CASE dealers' network is always ready to support and protect your investment and exceed your expectations, while also providing you with the ultimate ownership experience.

Our goal is to build both stronger machines-and stronger communities. At the end of the day, we do what's right for our customers and our communities so that they can count on CASE.

CNH Industrial
Deutschland GmbH
Case Baumaschinen
Benzstr. 1-3 - D-74076 Heilbronn
DEUTSCHLAND

CNH Industrial
Maquinaria Spain, S.A.
Avenida Aragón 402
28022 Madrid - ESPAÑA

CNH Industrial France, S.A.
16-18 Rue des Rochettes
91150 Morigny-Champigny
FRANCE

CNH Industrial Italia Spa
Lungo Stura Lazio 19
10156, Torino
ITALIA

CASE Construction Equipment
Cranes Farm Rd
Basildon - SS14 3AD
UNITED KINGDOM

NOTE: Standard and optional fittings can vary according to the demands and specific regulations of each country. The illustrations may include optional rather than standard fittings - consult your Case dealer. Furthermore, CNH Industrial reserves the right to modify machine specifications without incurring any obligation relating to such changes.

Conforms to directive 2006/42/EC

CASECE.COM
00800-2273-7373

The call is free from a land line.
Check in advance with your Mobile Operator if you will be charged. Toll free number not available from all calling areas.

Form No. 20234GB - MediaCross Firenze - 09/25